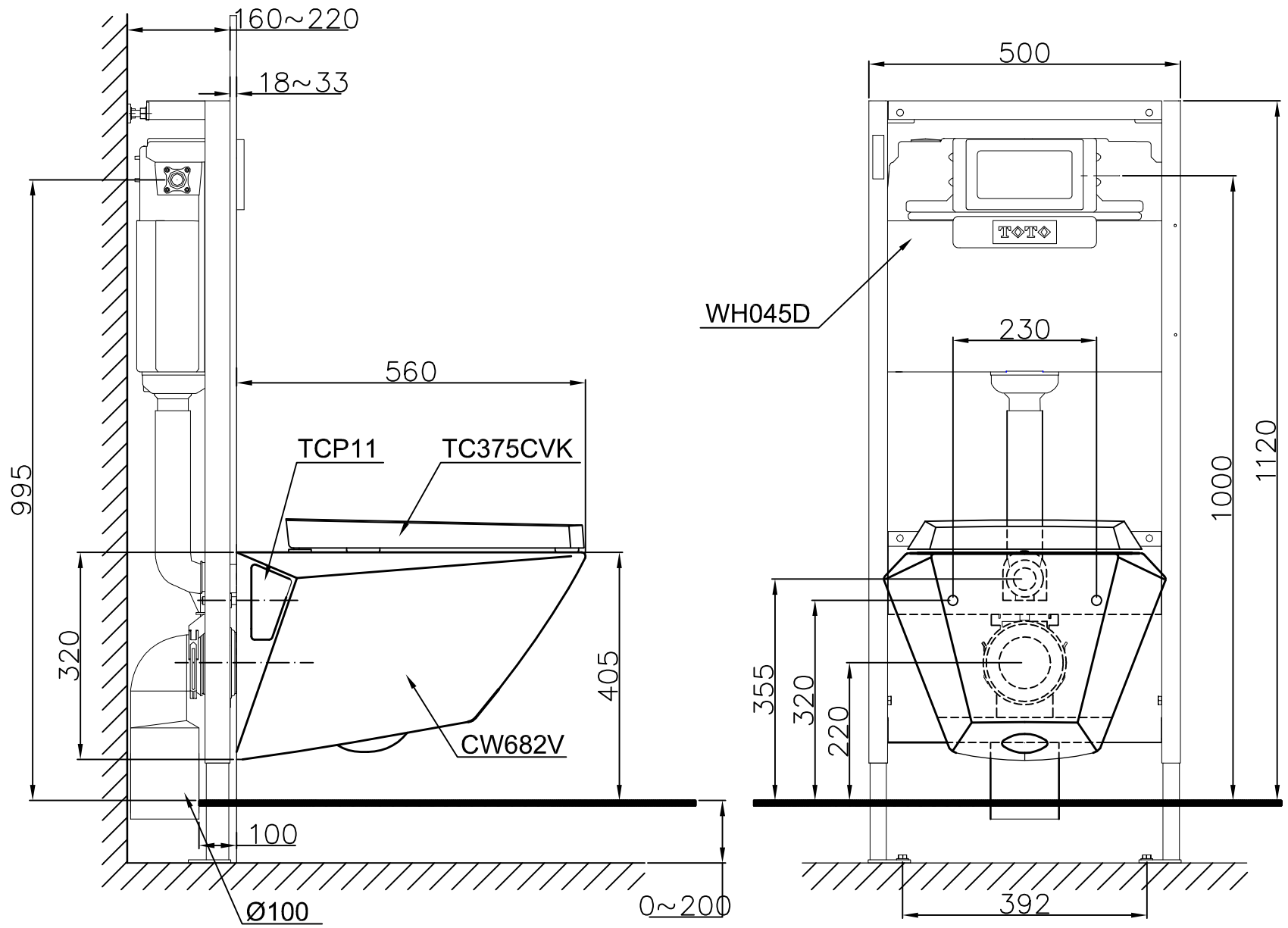
160~220
18~33
560
995
320
TCP11
TC375CVK
405
CW682V
100
Ø100
0~200
500
WH045D
230
1000
1120
355
320
220
392